ANFIBIO

AZZURRA®

LALS060500AM

lavabi/ washbasin

codice
code

Lavabo Anfibio sospeso monoforo completo di piano in legno.
Anfibio wall-hung washbasin 1 tap-hole with wooden top included.

bianco lucido/ shiny white — LALS060500AMBI

CM 60x50xh33	plt italy pz.12 - plt export pcs.24	kg 37

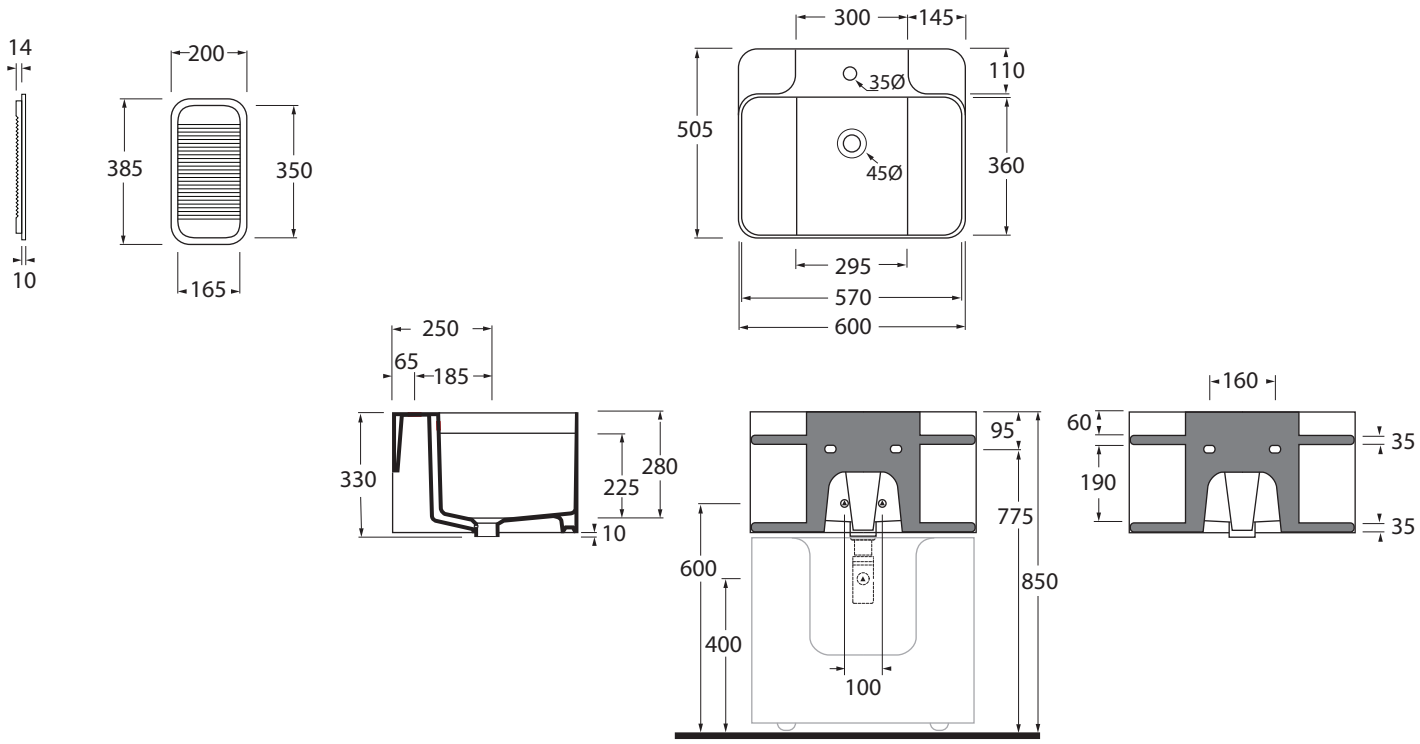

scala/scale 1:20 dimensioni/dimensions in mm

Complementi/complements:

Codice
code

Piletta automatica con troppo pieno
Authomatic waste system with over flow — PILTR

kg 0,5

TECHNICAL SHEET n°: **01**	DESIGNER: **MATTEO RAGNI**		CODE: **LALS060500AM**	
SHEET FORMAT: **A4**	ISO	REVISION: **02**	SCALE: **1:20**	DATE: **12/07/2019**
REGULATIONS: **CE EN 14688 / EN31 / Dop-14688**				
All the measurements respect the tolerances provided by the "AZZURRA QUALITY GUIDELINES".				

Azzurra sanitari in ceramica S.p.a.
via Civita Castellana snc 01030
Castel S.Elia (VT) - ITALY
Tel.+39.0761 518155
Fax.+39.0761 514560

* Regulations here shown are exclusively referred to ceramic items